-HW
HW-WAHJ
HW-WAHJV

-HX
HX-WAHJ
HX-WAHJV

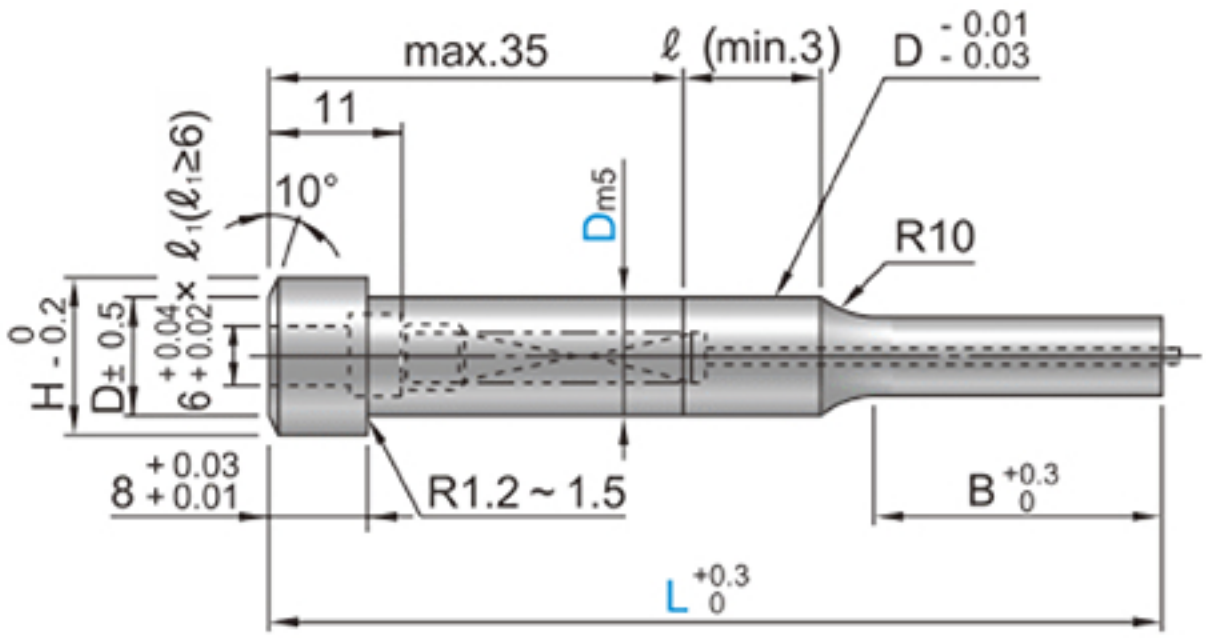

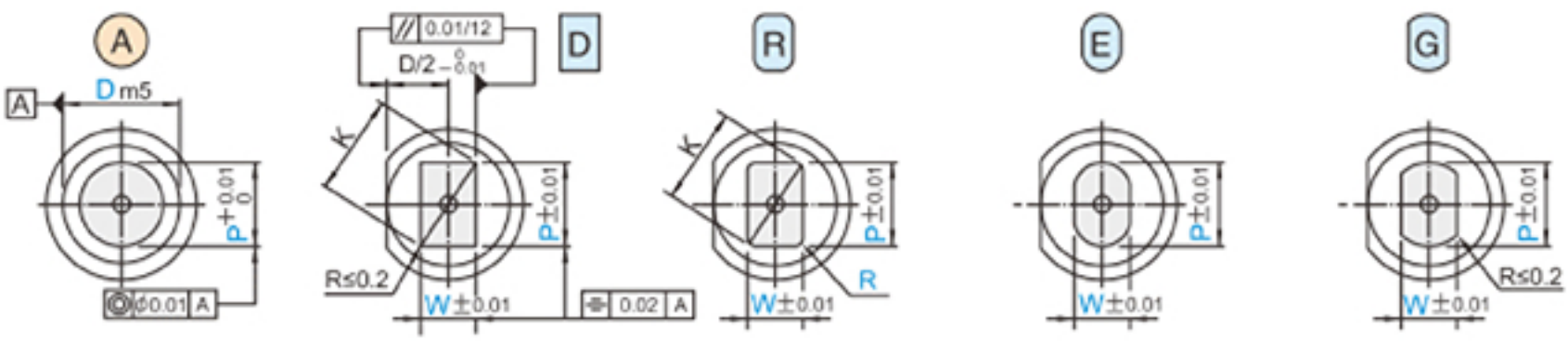

A	D	R	E	G
P≥W	P≥W	0.15 ≤ R < W/2	P>W	P>W
$K=\sqrt{P^2+W^2}$	$K=\sqrt{(P-2R)^2+(W-2R)^2}+2R$			

T	M H	A		Type HW 3000HV	Type HX 3000HV		(B) (L>S)	
D m5	SKH51 61~64HRC	MS6-25	☒	HW-WAHJ	HX-WAHJ	A D R E G	S L	-C
			☑	HW-WAHJV	HX-WAHJV			

Catalog No.

ORDER

Catalog No.	- L - P - W - R (R)
H-WAHJVDS-C 25 -	80 - P18.00 - W10.00

U 0.01mm

Catalog No. Type				D	L	A P	D E R G P·K max.	D E R G P·Wmin.	R R	B	H
(D m5) -HW HW-WAHJ HW-WAHJV	A D R E G	S	-C	10	(60)·70·80·90·100·(110)·(120)·(130)	5.00 ~ 9.99	9.97	5.00	0.15 ~ W/2 R	13	15
				13		6.00 ~ 12.99	12.97	6.00			18
				16		10.00 ~ 15.99	15.97			19	21
				20		13.00 ~ 19.99	19.97				25
				25		18.00 ~ 24.99	24.97				30
-HX HX-WAHJ HX-WAHJV		L		10	70·80·90·100·(110)·(120)·(130)	5.00 ~ 9.99	9.97	5.00		19	15
				13		6.00 ~ 12.99	12.97	6.00			18
				16		10.00 ~ 15.99	15.97			25	21
				20		13.00 ~ 19.99	19.97				25
				25		18.00 ~ 24.99	24.97				30

① L(60) ···→ B=8
① Ⓐ: P>D-0.03 ···→ ℓ =0
① D E R G : P·K>D-0.05 ···→ ℓ = 0
① L(110)(120)(130)